BOARD JOINTS

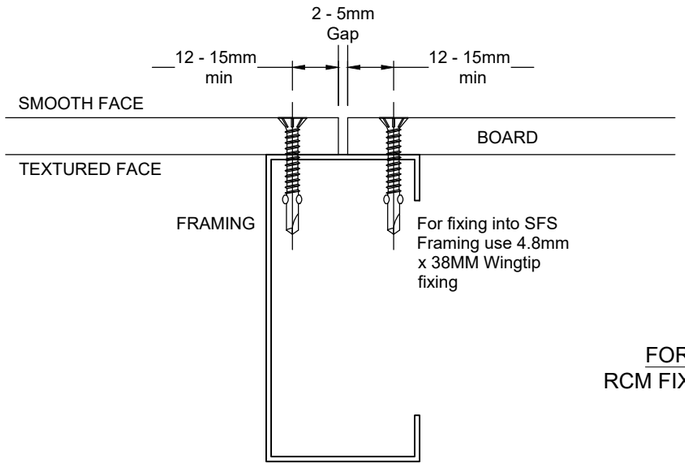

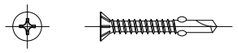

FOR FIXING INTO METAL FRAMING
RCM FIX006 WINGTIP SCREW Ø4.8mm x38mm
& Benx approved equivalent

FOR FIXING INTO TIMBER FRAMING
RCM FIX005 SCREW Ø4.2mm x 42mm
& Benx approved equivalent

BOARD JOINTS
DRY AREAS

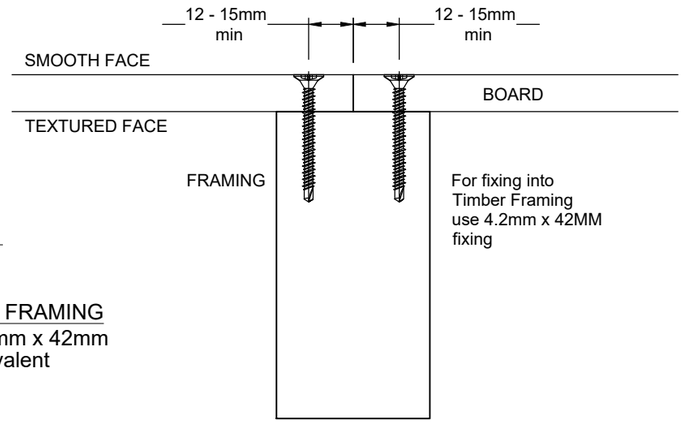

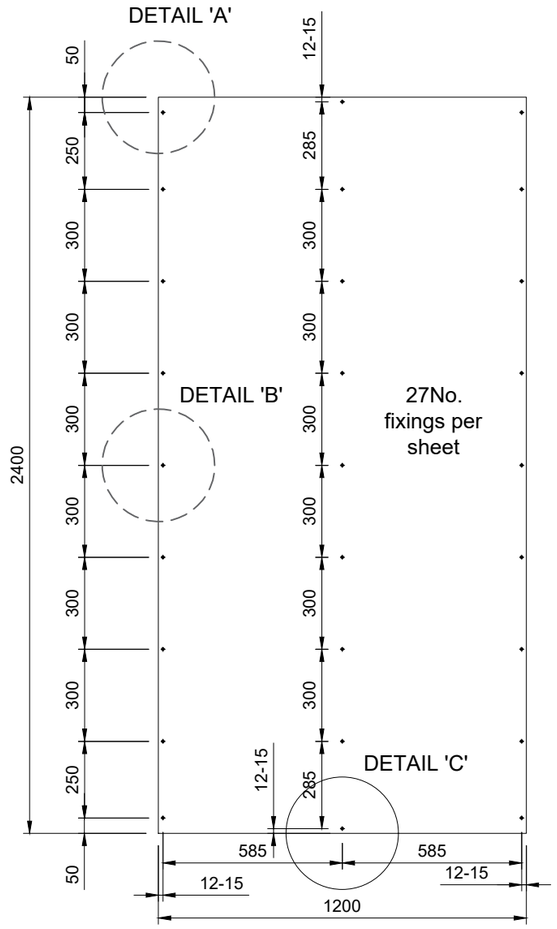

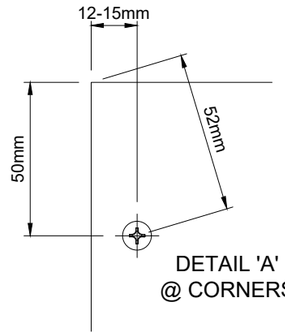

DETAIL 'A'
@ CORNERS

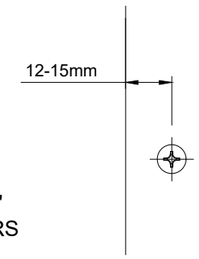

DETAIL 'B'
VERTICAL
EDGES

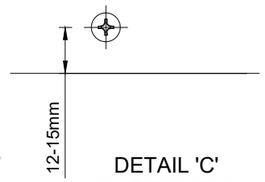

DETAIL 'C'
HORIZONTAL
EDGES

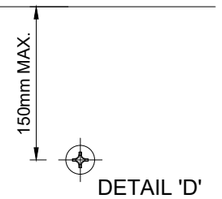

DETAIL 'D'
@ DEFLECTION HEAD

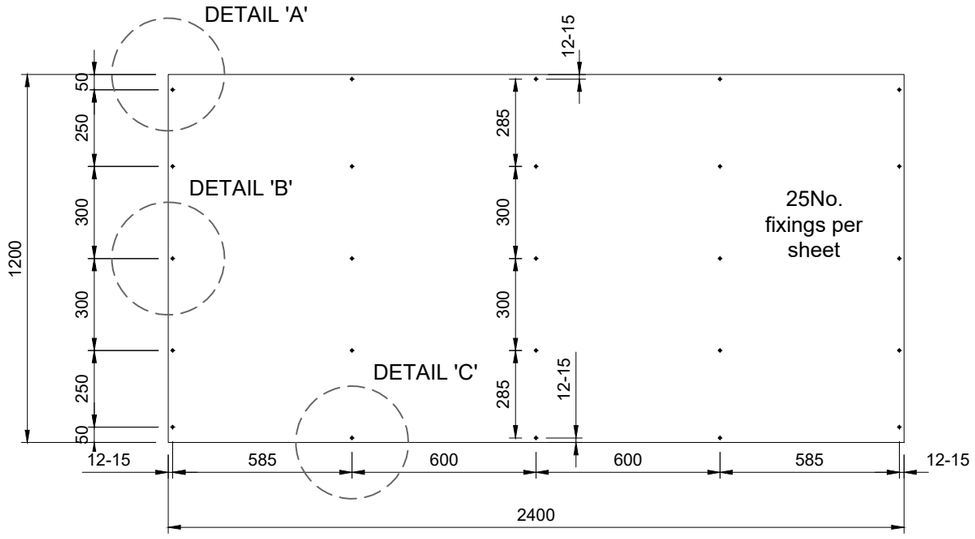

RCM - Y-WALL TYPICAL FIXING DETAILS

(NOMINAL 2mm TO 5mm JOINT GAP BETWEEN BOARDS)

MINIMUM EDGE DISTANCE 12mm - 15mm

REV	DATE	NOTE	BY
-	04/11/22	First Issue	MTM

benx
the future of façades

sps envirowall
RCM

Benx Ltd, Lonsdale Chambers,
Lonsdale Street,
Stoke-on-Trent
Staffordshire
ST4 4BT
Telephone: 0845 130 0983
Email:
technicalservices@benx.co.uk

STATUS: INFORMATION

PROJECT: Building Boards Fixing Guides
ISO No: 5164

DRAWING No: BBFG-YW-07

DESCRIPTION: Y-Wall Typical fixing details

DRAWN:	CHECK:		DATE:	REV:
MTM	MTM/DM	NTS@A3	Nov/2022	-

All performance data & systems specifications are for systems constructed with materials & components as shown. The inclusion or substitution of any other manufactures materials or components invalidates both test data, system performance and compliance with CDM 2015. The information is provided and based upon details received,which are assumed to include all the relevant facts and data. While it is believed to be correct, we accept no liability for its accuracy, adequacy or completeness. Recipients must satisfy themselves as to its suitability as we do not accept responsibility for any claims or consequential loss. Acceptance of the content and subsequent design responsibility rests entirely with the recipients. Any design changes that affect the detail which we are not informed of in a written format will void this detail. None of the content may be copied without the prior approval from the Benx Group Technical Services Department. This statement should be read in conjunction with the standard terms and conditions of Benx Group.